HF-ASS1
Addressable Sounder Strobe



The addressable sounder strobe is a kind of alarm equipment in fire alarm system. The device is installed in a public place, when the fire occurs, the device will send out sound and light alarm signals, warning personnel to evacuate to a safe place.

- Two-wire, convenient for construction wiring.
- Loud sound output, accompanied with bright alarm signal.

▪ Specification

Key Feature	
dB SPL	75 dB ~ 100 dB
Bus Parameters	
Wiring requirements	RVS 2*1.5 mm² Flame Retardant Wire, Max distance: 1000 m
General	
Weight	110 g
Main Power Supply	DC 24 V～DC 28 V
Indicator	1 Red
Wiring	Use L+ and L-, 1 and 2 is no use
Flash Frequency	0.5 Hz ~ 1 Hz
Modified Tone Period	4 s ~ 5 s
Material	ABS
Monitor Current	≤500 uA
Alarm Current	≤5 mA
Product Dimension	L 86 mm * W 86 mm * H 40mm (with base)

▪ Dimension

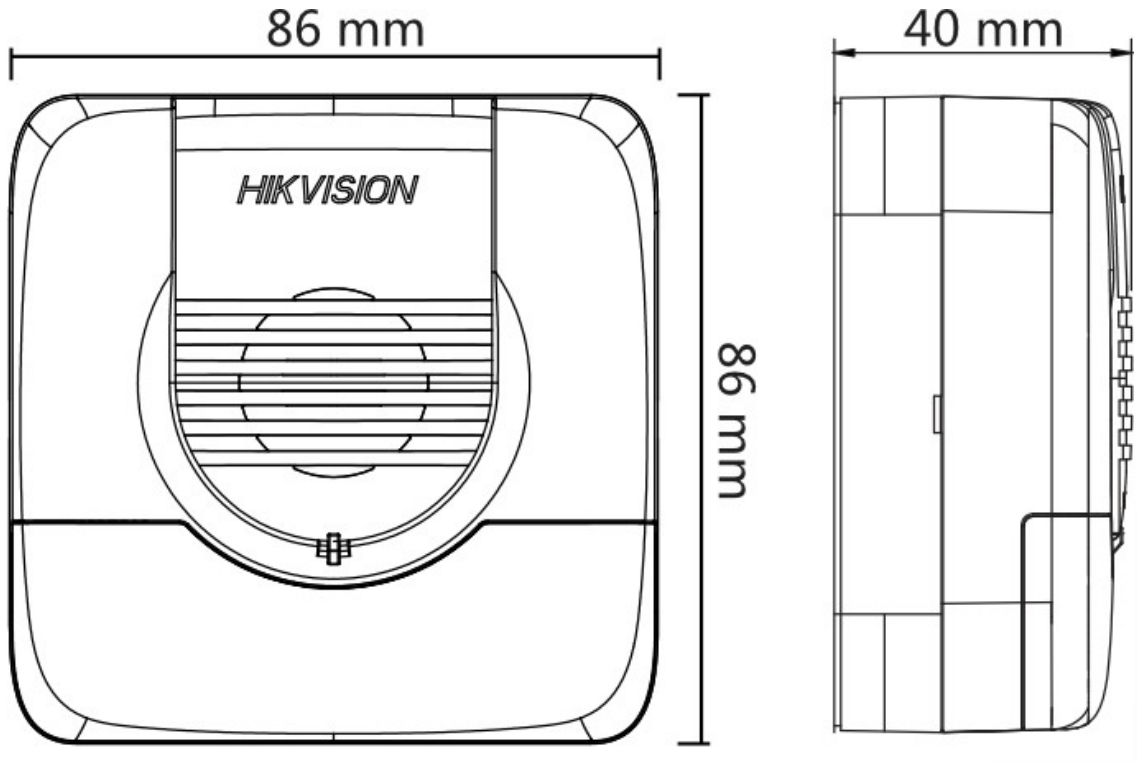

See Far, Go Further

www.hikvision.com
support@hikvision.com

© Hangzhou Hikvision Digital Technology Co., Ltd. Unless otherwise agreed, Hikvision makes no warranties, express or implied. We reserve the right to introduce modifications without notice.

HIKVISION®