# HF-VS409
# Visual Smoke Detection Camera




- Smoke detection, temperature detection, VaaS (Intruder Verification as a Service) approved
- High sensitivity, safe, reliable and handy
- 4 million HD resolution, wide angle lens
- Maximum resolution: 4 megapixels (2560 × 1440@25 fps), real-time image output
- Configurable intelligent video analysis to facilitate fire source detection and fire hazards verification
- Real-time video prompts, showing alarm information, real-time alarm prompts to mobile APP
- Upload alarm events and device status information
- External 12 VDC power supply, battery power supply in the event of power failure to ensure normal operation of the alarm
- Built-in buzzer, high decibel alarm
- 1-ch alarm input and 1-ch alarm output
- Remote silencing
- Link alarm images and videos when alarm is triggered
- Low bit rate, low latency, ROI enhanced coding, SVC adaptive coding technology, smart 265 coding
- IR lamp, long service life, irradiation distance up to 15 meters
- Automatic switch of ICR infrared filter to achieve 24/7 monitoring
- Day/Night mode settings
- microSD/SDHC/SDXC card (128 G) local storage
- 3D digital noise reduction, backlight compensation, automatic electronic shutter function, adapt to different monitoring environments

## ▪ Specification

| | |
|---|---|
| **Camera** | |
| Resolution | 2560 × 1440 |
| Sensor | 1/2.7" progressive scan CMOS |
| lowest luminance | 0.015 Lux @ (F2.25, AGC ON), 0 Lux with IR |
| Lens | 1.05 mm, F2.2<br>Horizontal: 170°, Vertical: 160° |
| Image settings | Brightness, contrast, saturation |
| Wide Dynamic Range | 120 dB |
| Shutter | 1/25 s to 1/100,000 s |
| Day & Night | ICR infrared filter |
| Image enhance | Backlight compensation, high light inhibition, 3D digital noise reduction |
| Encoding Type | Main Profile |
| Video compression rate | 32 Kbps to 8 Mbps |
| Video compression standard | H.264, H.265 |
| Smart alarm | Fire source recognition, indoor emergency exits blocking, intrusion detection, cross-border detection |
| Frame rate | 50 Hz: 25 fps (2560 × 1440, 1920 × 1080, 1280 × 720) |
| Interface protocol | ONVIF(PROFILE S,PROFILE G),ISAPI |
| General function | Heartbeat, mirror, password protection,watermarking technology, IP address filtering |
| Storage | microSD/microSDHC/microSDXC card (128 GB) Local storage and transmission when disconnected from the network<br>NAS (NFS, SMB/CIFS) SD card encryption and SD card status detection with Hikvision Card |
| Power comsumption | ≤ 6 W |
| IR range | 15 m (49 ft.) |
| **Detector** | |
| High temperature alarm | Yes |
| Temperature threshold | 54 ℃ to 70 ℃ (129℉ to 158℉) |
| **Function** | |
| Tampering alarm | Yes |
| Mute | Yes |
| Maze dirty alarm | Yes |
| Low voltage alarm | Yes |
| Self-check | Yes |
| Remote muffler | Yes |
| **Interface** | |
| Alarm | 1-ch audio input (Line in),<br>1-ch audio output (Line Out) |
| Communication Interface | 1 RJ45 Self-adaptive 10 M/100 M Ethernet Interface (Support PoE) |
| **General** | |
| Standby current | Smoke detector: ＜9 μA<br>Camera: ＜350 mA |
| Executive standard | Q/HKD 007-2019 |
| Working principle | Photoelectric |
| Alarm sound level | ≥85 dB@3 m （A-weighting） |

| | |
|---|---|
| Power supply | Main power: 220 VAC to 12 V; PoE: 802.3af, Class 2<br>Alternate power: 3 VDC |
| Operation temperature | -10 °C to 55 °C (14 °F to 131 °F) |
| Operation humidity | ≤95% no condensing |
| Weight | With packaging: 900 g<br>Without packing: 475 g |
| Dimension (W×H×D) | With packaging: 184 mm × 184 mm × 214 mm<br>Without packing: φ 120 mm × H 72 mm(Φ 4.72" × 2.87") |
| Alarm current | Smoke detection: ＜40 mA |

## ▪ Available Model

HF-VS409

## ▪ Dimension

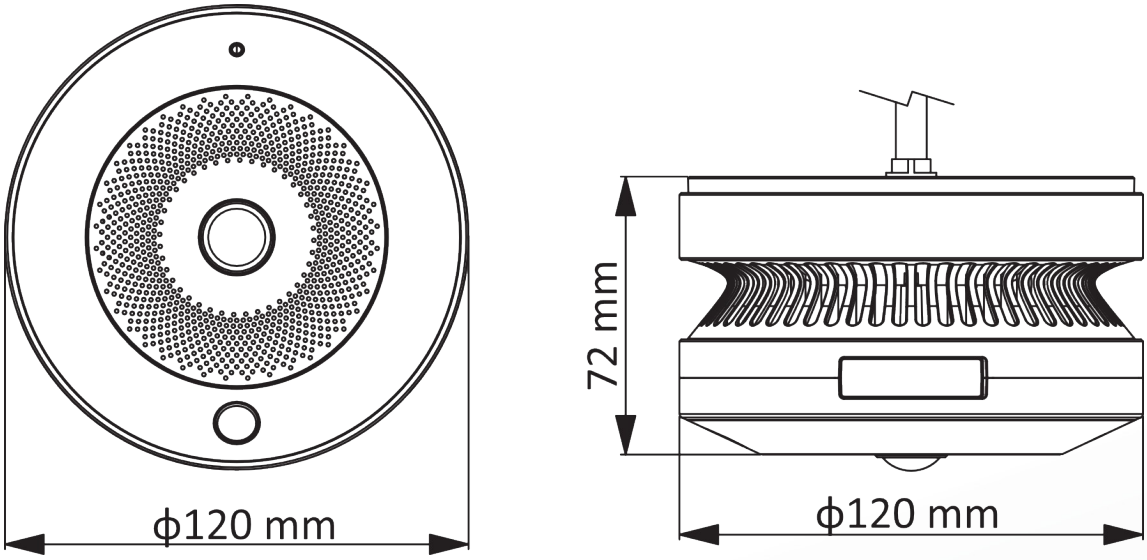

# See Far, Go Further

www.hikvision.com
support@hikvision.com

© Hangzhou Hikvision Digital Technology Co., Ltd. Unless otherwise agreed, Hikvision makes no warranties, express or implied. We reserve the right to introduce modifications without notice.

HIKVISION®